BI SERIES – UTILITY BLOWERS

OPERATION INSTRUCTIONS AND PARTS MANUAL

MODELS: BI-10 THROUGH BI-36, BI-10RM THROUGH BI-36RM

GENERAL SAFETY

Rotating parts on fans should not be exposed. Where these components are not protected by ductwork, cabinets or covers, appropriate guards should be employed to restrict exposure to rotating parts. Access doors should not be opened with the fan operating to avoid foreign objects being drawn into the system. On initial start-up a careful inspection should be carried out to ensure no foreign material is present which could become airborne in the system.

Read installation and operation instructions carefully before attempting to install, operate or service Delhi BI/BI-RM Series Blowers. Failure to comply with instructions could result in personal injury and/or property damage. Retain instructions for future reference.

UNIT DESCRIPTION

DELHI BI series blowers are specifically designed as a quiet and efficient blower. The BI series incorporates a backwardly inclined (BI) blade configuration to generate air moving performance. The BI series are single inlet blowers, which have a standard CCW rotation and bottom horizontal discharge. The discharge direction may be easily altered to any one of eight positions without removal of the wheel venturi or housing.

Complete access for motor and drive installations and servicing may be completed by partial removal of the drive compartment cover assembly. Pre-lubricated ball bearings, motor adjustment hardware and a dynamically balanced wheel are standard equipment. Operating temperature range is –65 to 220 deg. F.

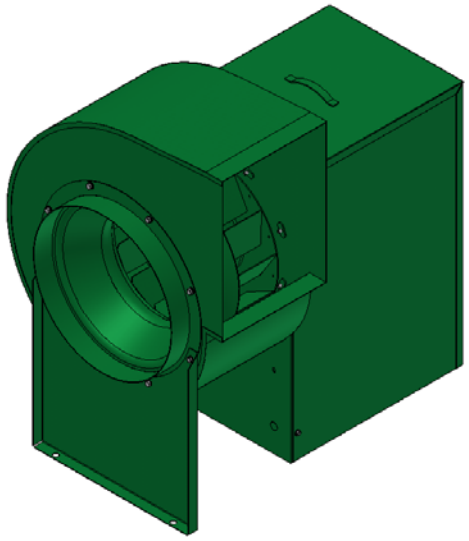

Fig. 1

MODEL	MAX. H.P	SHAFT DIA.	WEIGHT
BI-10/BI-10RM	2	¾	78
BI-12/BI-12RM	5	1	112
BI-13/BI-13RM	7-1/2	1	134
BI-15/BI-15RM	7-1/2	1	140
BI-16/BI-16RM	10	1-3/16	162
BI-18/BI-18RM	10	1-3/16	172
BI-20/BI-20RM	10	1-3/16	289
BI-22/BI-22RM	15	1-3/16	322
BI-24/BI-24RM	15	1-7/16	385
BI-27/BI-27RM	15	1-7/16	411
BI-30/BI-30RM	15	1-11/16	517
BI-33/BI-33RM	20	1-11/16	607
BI-36/BI-36RM	25	1-15/16	747

ALL SHAFTS ARE KEYWAYED

GENERAL

Inspect unit for damage, report any shipping damage to carrier. Check all fasteners and re-tighten as required. Rotate the blower wheel by hand to ensure free rotation. If rubbing occurs, loosen the inlet venturi bolts, re-position the venturi to establish clearance, re-tighten bolts.

Delhi Industries Inc. 523 James Street, Delhi, Ontario N4B 2Z3
Tel. (519) 582-2440 Fax. (519) 582-0581 www.delhi-industries.com

INSTALLATION

1. Secure the exhauster to the curb cap or sleepers (supplied by others) through the ¾" diameter holes provided in the base of the motor compartment and leg. For proper motor compartment ventilation, if the unit is mounted on a floor or solid surface, provide a minimum 1" clearance to the motor cabinet bottom. Install spring isolators or duct isolators where required.
2. Complete all subsequent duct connections.
3. Rotate the blower wheel by hand. It should not rub against the housing inlet. If rubbing occurs, loosen the set-screws on the wheel hub and shift the wheel to obtain clearance. Re-tighten all set-screws.
4. Insert the four motor nuts and bolts up through the bottom of the sliding motor platform to match the bolting configuration of the motor to be installed. The master hole for smaller motor frames is located at the top left hand corner of the motor platform furthest from the blower housing. The master hole for 213T, 215T and 254T frame motors is 2" inset from the fore mentioned master hole for smaller frame motors.
5. Mount the blower sheave on the blower shaft and tighten its set-screw securely on the key of the shaft. (See Table 1 for drive data).
6. Mount the motor sheave on the motor shaft. Leave some clearance between the pulley and the motor end bell. Tighten the set-screws on the key of the motor shaft.
7. With the motor platform in its highest position install the V belt within the sheave grooves. Adjust the sheave on the blower shaft to ensure proper pulley alignment (see figure 2) and secure in place. A straight edge across the face of the driven pulley should be parallel to the belt once proper alignment has been achieved.

WARNING: Excessive belt tension is the most frequent cause of bearing wear and resulting noise. Proper belt tension is critical for quiet efficient operation.

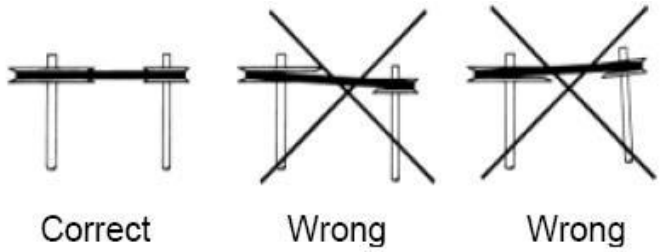

Fig. 2: Pulley Alignment

8. Loosen the four clamping bolts around the motor platform and slide the motor platform within the slotted rails to adjust belt tension. Ideal belt tension is the lowest tension at which the belt will not slip during start up. As rule of thumb suggests that ¾" of deflection mid span under medium finger pressure (2-3 lbs.) for every foot of span is approximately proper belt tension. Tighten the motor platform clamping bolts once proper belt tension has been achieved.

ELECTRICAL

WARNING: Ensure power supply is disconnected and locked out prior to making electrical connections.

Before connecting the motor to the electrical supply, check the electrical characteristics and wiring instructions as indicated on the motor nameplate or as shown below. Complete electrical connections as indicated.

WARNING: A ground wire must be connected from the motor housing to a suitable electrical ground.

OPERATION

1. After electrical connections are completed, energize the unit momentarily and ensure that the rotation of the wheel is correct. Apply full power.
2. With the air systems in full operation and all ducts and access panels attached, measure current input to the motor and ensure that it is less than the rated full load motor amperage.
3. Proper adjustment to the belt tension is critical for quiet efficient operation.

TABLE 1: DRIVE SELECTION Based on 1725 RPM motor			BI-10		BI-12			BI-13			BI-15			BI-16			BI-18			BI-20		
			MOTOR FRAME																			
MOTOR PULLEY	BLOWER PULLEY	RPM RANGE	48	56/143 /145T	48	56/143T /145T	182T /184T	56/143T /145T	182T /184T	213T /215T	56/143T /145T	182T /184T	213T /215T	56/143T /145T	182T /184T	213T /215T	56/143T /145T	182T /184T	213T /215T	56/143T /145T	182T /184T	213T /215T
1VL34	BKH140	252-384	4L470	--	4L530	--	--	--	--	--	--	--	--	--	--	--	--	--	--	--	--	--
	BKH110	327-500	4L400	B38	4L460	B43	--	B43	--	--	B43	--	--	B47	--	--	B47	--	--	B54	--	--
	BKH80	468-714	4L330	B31	4L400	B37	--	B37	--	--	B37	--	--	B41	--	--	B41	--	--	B48	--	--
	BKH60	655-1000	4L290	B27	4L360	B33	--	B33	--	--	B33	--	--	B37	--	--	B37	--	--	B45	--	--
	BKH50	819-1250	4L270	B25	4L340	B32	--	B32	--	--	B32	--	--	B36	--	--	B36	--	--	B43	--	--
	BKH40	1024-1563	4L260	B24	4L330	B30	--	B30	--	--	B30	--	--	B34	--	--	B34	--	--	B42	--	--
1VL44	BKH100	536-728	4L380	B36	4L440	B42	--	B42	--	--	B42	--	--	B45	--	--	B45	--	--	B53	--	--
	BKH90	603-819	4L360	B34	4L430	B41	--	B41	--	--	B41	--	--	B44	--	--	B44	--	--	B52	--	--
	BKH70	804-1092	4L320	B30	4L390	B37	--	B37	--	--	B37	--	--	B41	--	--	B41	--	--	B48	--	--
	BKH60	965-1310	4L300	B28	4L370	B35	--	B35	--	--	B35	--	--	B39	--	--	B39	--	--	B44	--	--
	BKH50	1207-1638	4L290	B26	4L350	B33	--	B33	--	--	B33	--	--	B37	--	--	B37	--	--	B45	--	--
	BKH40	1509-2049	4L270	B25	4L340	B32	--	B32	--	--	B32	--	--	B36	--	--	B36	--	--	B44	--	--
2MVP70B84P	2B74SK	1599-1925	--	--	--	--	--	--	--	B42	--	--	B42	--	--	B45	--	--	B45	--	--	B53
	2B64SDS	1848-2266	--	--	--	--	--	--	--	B40	--	--	B40	--	--	B44	--	--	B44	--	--	B52

			BI-22			BI-24			BI-27			BI-30			BI-33			BI-36		
			MOTOR FRAME																	
MOTOR PULLEY	BLOWER PULLEY	RPM RANGE	56/143T /145T	182T /184T	213T /215T	56/143T /145T	182T /184T	213T /215T	56/143T /145T	182T /184T	213T /215T	56/143T /145T	182T /184T	213T /215T	56/143T /145T	182T /184T	213T /215T	213T /215T	254T /256T	284T /286T
1VL34	BKH190	225-300	B72	--	--	B81	--	--	B81	--	--	--	--	--	--	--	--	--	--	--
	BKH140	308-411	B61	--	--	B70	--	--	B70	--	--	--	--	--	--	--	--	--	--	--
	BKH110	398-530	B55	--	--	B64	--	--	B64	--	--	--	--	--	--	--	--	--	--	--
	BKH90	492-657	B51	--	--	B60	--	--	B60	--	--	--	--	--	--	--	--	--	--	--
	BKH70	646-862	B47	--	--	B57	--	--	B57	--	--	--	--	--	--	--	--	--	--	--
	BKH50	940-1254	B43	--	--	B53	--	--	B53	--	--	--	--	--	--	--	--	--	--	--
1VP44	BKH110	514-680	--	B54	--	--	B63	--	--	B63	--	--	--	--	--	--	--	--	--	--
	BKH90	636-841	--	B50	--	--	B60	--	--	B60	--	--	--	--	--	--	--	--	--	--
	BKH80	722-955	--	B48	--	--	B58	--	--	B59	--	--	--	--	--	--	--	--	--	--
	BKH70	835-1105	--	B47	--	--	B56	--	--	B57	--	--	--	--	--	--	--	--	--	--
	BKH60	990-1309	--	B44	--	--	B55	--	--	B55	--	--	--	--	--	--	--	--	--	--
	BKH50	1215-1607	--	B43	--	--	B53	--	--	**B53***	--	--	--	--	--	--	--	--	--	--
2VP71	2B184SK	506-618	--	--	BX73(2)	--	--	B81(2)	--	--	B81(2)	--	B89(2)	B87(2)	--	B89(2)	B87(2)	B88(2)	--	--
	2B124SK	751-918	--	--	BX59(2)	--	--	B68(2)	--	--	B68(2)	--	B76(2)	B75(2)	--	B76(2)	B75(2)	B75(2)	--	--
	2B110SK	846-1034	--	--	BX57(2)	--	--	B67(2)	--	--	B67(2)	--	B75(2)	B73(2)	--	B75(2)	B73(2)	**B73(2)***	--	--
	2B86SK	1083-1323	--	--	BX52(2)	--	--	B62(2)	--	--	B62(2)	--	**B70(2)***	**B68(2)***	--	**B70(2)***	**B68(2)***	--	--	--
	2B64SDS	1455-1778	--	--	BX48(2)	--	--	**B58(2)***	--	--	--	--	--	--	--	--	--	--	--	--
			--	--	--	--	--	--	--	--	--	--	--	--	--	--	--	--	--	--
2MVP70B84P	25V2120SF	506-618	--	--	--	--	--	--	--	--	--	--	--	BX94(2)	--	--	B94(2)	B94(2)	BX93(2)	BX92(2)
	2B154SK	751-918	--	--	B67(2)	--	--	B76(2)	--	--	B76(2)	--	--	BX82(2)	--	--	B82(2)	B83(2)	BX82(2)	BX80(2)
	2B136SK	846-1034	--	--	B64(2)	--	--	B73(2)	--	--	B73(2)	--	--	BX80(2)	--	--	B80(2)	**B80(2)***	**BX79(2)***	**BX77(2)***

** Basic drive selections shown above. For more drive selection options, refer to the Delair Drive Selection program.

Delhi Industries Inc. 523 James Street, Delhi, Ontario N4B 2Z3
Tel. (519) 582-2440 Fax. (519) 582-0581 www.delhi-industries.com

MAINTENANCE

Ensure power supply is disconnected and locked out prior to performing maintenance

1. Inspect and tighten the wheel set screw after the first 50 to 100 hours of operation and periodically thereafter.
2. Follow the motor manufacturer's instructions for motor lubrication. Remove any excess lubrication.
3. Drives:
   A – Check belt tension and alignment, replace cracked or worn belts. If it is necessary to replace one belt on a multiple belt drive, replace all the belts with a matched set.
   B – Under normal conditions, no re-lubrication is the rule. The bearing lubricant cavity is 1/3-1/2 filled as shipped from the factory. Never lubricate new bearings.
   C – Tighten set-screws on sheaves, wheel and bearing locking collars.
4. Clean the blower wheel periodically. Material build up on the blades can cause wheel imbalance which, may result in wheel or motor bearing failure.
5. Generally, bearings should be lubricated at six to twelve month intervals. Recommended lubricants are: a) Imperial Oil – ESSO Beacon 325, or b) Shell Oil – Alvania Grease #3. A small amount of grease should be added slowly when the shaft is rotating. **Note: Over greasing may cause damage to the bearing. Avoid rupturing the bearing seal.**
6. To reinstall replacement ball bearings press the locking collar against the inner ring of the bearing and turn in the direction of the shaft rotation until engaged. Insert a drift pin into the pin hole and tap lightly to set. Tighten set-screw on locking collar firmly.
7. Should further service to the blower be necessary, refer to the exploded view illustration (Figure 3).

PARTS LIST

1.INLET VENTURI C/W INLET RING
2.SHAFT (KEYWAYED BOTH ENDS)
3.BACKWARD INCLINE WHEEL
4.BLOWER HOUSING
5.MOTOR COMPARTMENT
6.PILLOW BLOCK BALL BEARINGS
7.MOTOR COMPARTMENT COVER (3 REMOVABLE PANELS)
8.MOTOR PLATFORM
9.ACCESS DOOR (OPTIONAL, STD BI-RM)
10.DRAIN 2" DIA. EXT (OPTIONAL, STD BI-RM)

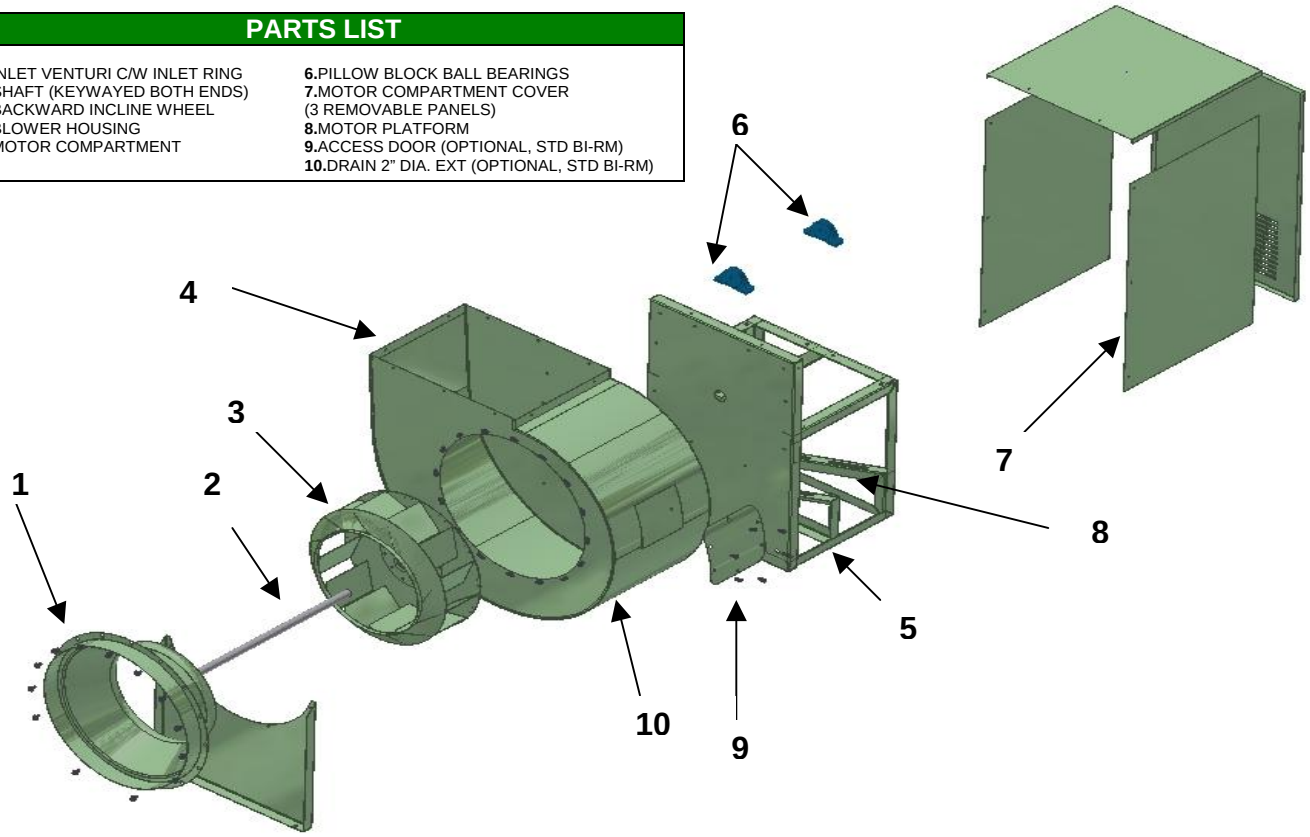

Figure 3: Exploded view

WARRANTY

Delhi Industries Inc. Air Moving Products are guaranteed for a period of one year against manufacturing defects in material and workmanship when operating under normal conditions. Liability is limited to the replacement of defective parts. Labour and transportation costs are not included.